Intraground™ N1 Series Nonmetallic Tumbler Switches

Explosionproof

Enclosures and Covers Have Neutral Color. Non-Factory Sealed. ①

NEC:
Class I, Division 1 and 2, Groups C, D
NEMA 3, 4X, 7CD, 12

Applications

- Listed for use in Class I, Group C and D, Division 1 and 2 atmospheres such as:
  - — Diethyl ether
  - — Methyl ethyl keytone
  - — Acetone
  - — Toluene
  - — No. 3 fuel oil
  - — Ammonium hydroxide (20%)
  - — Benzene
  - — Regular unleaded gas
  - — Ethyl acetate
  - — Hexane and methanol
- Not suitable for:
  - — Ethylene dichloride
  - — Partially halogenated hydrocarbons.
- Sealing fittings must be field installed adjacent to enclosure on all conduit runs. ①
- Explosionproof. With sealing fittings installed at each conduit entrance, the N1 Series enclosures withstood a hydrostatic test of four times the maximum internal explosion pressure that could be developed from a gas or vapor explosion in actual use.

Features

- Nonmetallic construction with metal imbedded grounding grid. No need to install special wires and parts for grounding. Feed-thru or dead-end grounded 1/2” or 3/4” conduit openings for threaded conduit.
- Special grounding wire furnished with each box provides safe grounding when cover is removed.
- Ideal for use in corrosive environments. Nonmetallic enclosures with corrosion resistant parts coated with epoxy, Teflon® ② or Mylar® ②, these switches offer unsurpassed resistance to a wide variety of corrosive chemicals.
- Unique labyrinth-path construction assures flame-tight joint between body and cover.
- Silicone gasket, specially designed for the labyrinth-path joint, prevents entrance of moisture without interfering with the venting of cooled hazardous gases and vapors.
- Typical mechanical properties of 24,500 psi tensile strength, 3% elongation at break, 33,000 psi flexural strength, and 1,200,000 psi flexural modulus.
- Electrical properties of sample specimens: dielectric strength (in air) of 769 at 1/16”.
- High strength thermoplastic polyetherimide, together with thick walls (5/16”) and sound structural design (rounded corners) provides superior resistance to impact and crushing.
- Excellent resistance to ultraviolet light and water.
- Excellent conduit connection strength.
- Excellent resistance to attack by fungi and mold.
- Excellent heat deflection temperature: sample specimens rated at +210 °C (+410 °F).
- UL Temperature Index (continuous use temperature): +170 °C (+338 °F) electrical properties, +170 °C (+338 °F) mechanical properties with impact.
- Superior flammability resistance.
- Enclosures have external mounting lugs for ease of mounting.
- Smooth, rounded integral bushing in each hub protects conductor insulation.
- 20 Amp and 30 Amp units available for use with 120-277 Vac.
- Corrosion resistant, strong stainless steel Teflon® ② coated hex head cap screws attach cover and body for approved flame-tight construction.
- Operating handle has close-tolerance threaded stainless steel shaft to meet explosionproof requirements. Provides positive corrosion resistant operation.
- Handle may be locked in ON or OFF position.

Standard Materials

- Body and cover: 30% glass-reinforced thermoplastic polyetherimide — neutral color
- Handle: nylon 6/6
- Cover bolts: stainless steel
- Nameplates: aluminum

Standard Finishes

- Cover bolts: Teflon® ②
- Nameplates: Mylar® ②

NEC Certifications and Compliances

- UL Standards: UL 894, UL 1203
- UL Listed: E10523

Related Products

- For classified-location push button, pilot light and selector switch control stations, see *Non-Hazardous Control Stations Section*.
- For sealing fittings, See *Hazardous Location Fittings Section.*

① Sealing fittings not furnished. Sealing fittings must be field-installed adjacent to enclosure on all conduit runs. See Hazardous Location Fittings Section.
② Teflon and Mylar are registered trademarks of E. I. du Pont de Nemours and Company.

© June 2017

Intraground™ N1 Series Nonmetallic Tumbler Switches

Explosionproof

Enclosures and Covers Have Neutral Color. Non-Factory Sealed. ①

NEC:
Class I, Division 1 and 2, Groups C, D
NEMA 3, 4X, 7CD, 12

Aluminum grounding grid, imbedded into the nonmetallic enclosure during molding, provides complete grounding system. No field work. No extra grounding wires or parts required.

			Catalog Number ②			
			20 Ampere – 120–277 Vac ③		30 Ampere – 120–277 Vac ④	
	Switch	Hub Size (Inches)	Dead–End	Feed–Thru	Dead–End	Feed–Thru
1-Gang Tumbler Switches						
	1-Pole	1/2 or 3/4	**N1D75-F1**	**N1DC75-F1**	**N1D75-F13**	**N1DC75-F13**
	2-Pole	1/2 or 3/4	**N1D75-F2**	**N1DC75-F2**	**N1D75-F23**	**N1DC75-F23**
	3-Way	1/2 or 3/4	**N1D75-F3W**	**N1DC75-F3W**	**N1D75-F3W3**	**N1DC75-F3W3**
	4-Way	1/2 or 3/4	**N1D75-F4W**	**N1DC75-F4W**	**–**	**–**

		Catalog Number ②			
		20 Ampere – 120–277 Vac ③		30 Ampere – 120–277 Vac ④	
	Switch	Cover	Switch	Cover	Switch
1-Gang Covers and Switches					
	All covers furnished with four bolts and blank nameplate.				
	1-Pole	**N1K-F12**	**EFSFR1Q**	**N1K-F12**	**EFSFR13Q**
	2-Pole	**N1K-F12**	**EFSFR2Q**	**N1K-F12**	**EFSFR23Q**
	3-Way	**N1K-F34W**	**EFSFR3WQ**	**N1K-F34W**	**EFSFR3W3Q**
	4-Way	**N1K-F34W**	**EFSFR4WQ**		
Cover Only	**Switch Only**				

	Hub Size (Inches)	Catalog Number ② Dead–End	Catalog Number ② Feed–Thru
1-Gang Nonmetallic Mounting Bodies			
For use with covers above.	1/2 or 3/4	**N1D75Q**	**N1DC75Q**

① *Sealing fittings must be field-installed adjacent to enclosure on all conduit runs.*
② *Furnished with a 3/4" to 1/2" NPT reducer.*
③ *20 Amp — 1 HP at 120 Vac and 2 HP at 240 Vac.*
④ *30 Amp — 2 HP at 120 Vac or 240 Vac.*

© June 2017

Intraground™ N1 Series Nonmetallic Tumbler Switches

Explosionproof

Enclosures and Covers Have Neutral Color. Non-Factory Sealed. ①

NEC:
Class I, Division 1 and 2, Groups C, D
NEMA 3, 4X, 7CD, 12

Nameplate Mounting Bracket

Description	Catalog Number
Bracket for N1 Series	**NPBRKT-N1N2**

To order bracket with control station, add suffix –**NPBRKT** to end of catalog number.

Note: Mount bracket between cover screws and cover. Do not mount bracket between ground joint flame path between cover and backbox.

Dimensions in Millimeters (Inches)

Front Operated Tumbler Switches

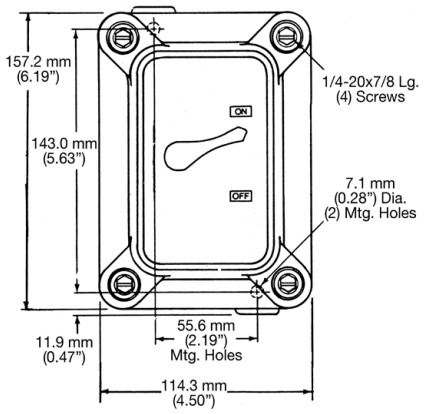

Front

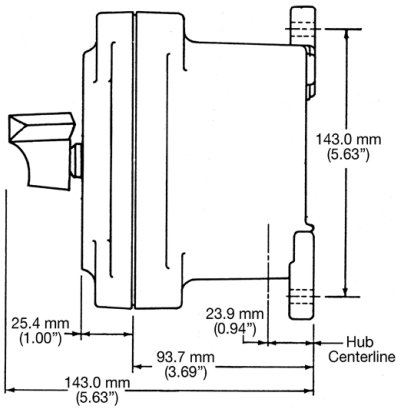

Side

NPBRKT Nameplate Mounting Bracket

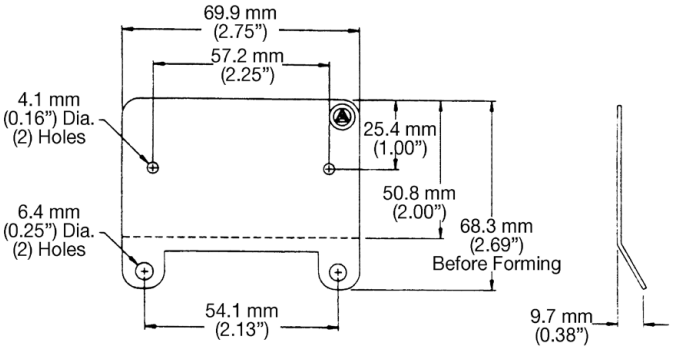

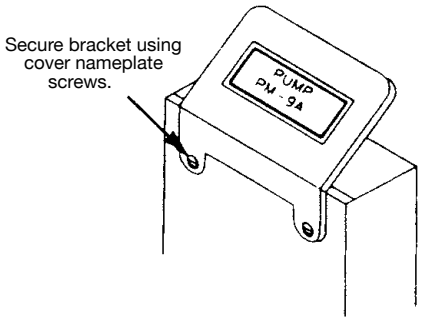

① *Sealing fittings not furnished. Sealing fittings must be field-installed adjacent to enclosure on all conduit runs. See Hazardous Location Fittings Section.*

© June 2017

EMERSON